FE185C057HA-1

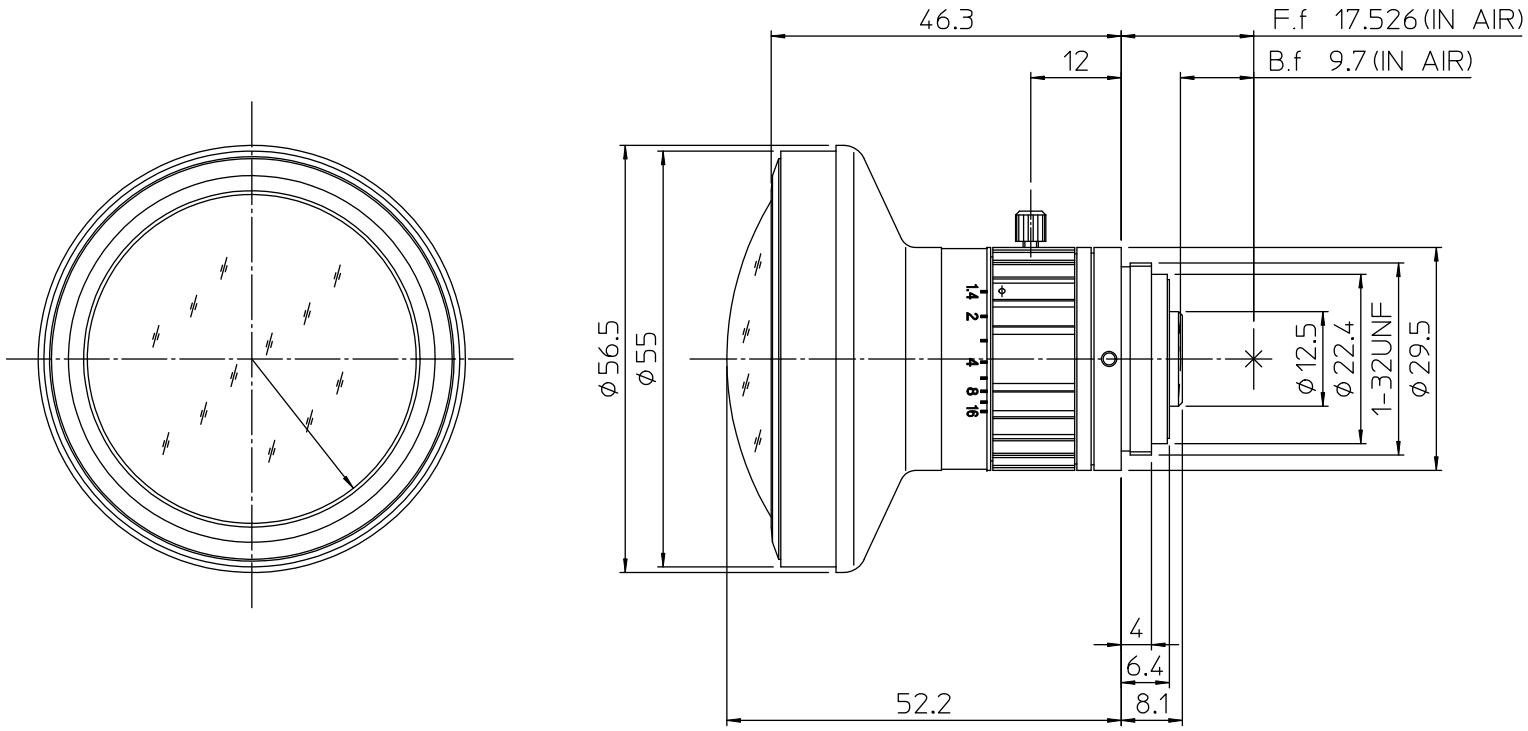

レンズ本体：外観図
Outline drawing
FE185C057HA-1

Apr 27,2018