Specifications for Approval

1	Model	BL-03618MP13IR		9	Distortion	34.1%	
2	Sensor	CCD/CMOS		10	Iris	FIXED	
3	Image Format	1/3"		11	MTF	150lp/mm	
4	Focal Length	3.6mm					
5	Aperture, F/#	1.8		12	M.O.D.	0.2m	
6	(F.O.V.)(D/H/V)	100.2°/77°/54°	1/3"	13	Lens Construction	6-5	
7	Back Focal Length	6.59mm		14	Mount	M12x0.5-6g	B
8	(Effective Diameter)	ϕ10.4mm	Front	15	Dimension	ϕ14x16.6mm	
		ϕ5.4mm	Rear	16	Weight		

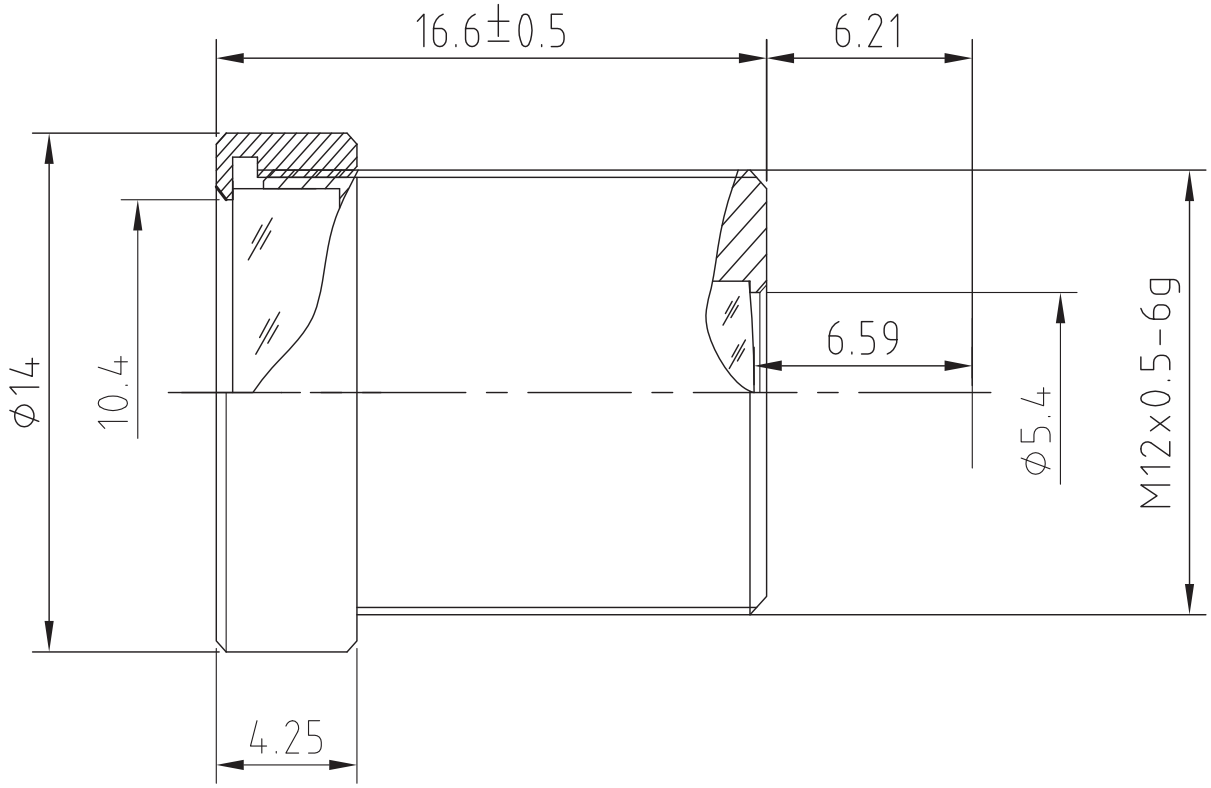

Camera Lens	BL-03618MP13IR	
	Art.-Nr.: 301438	
	Vision Dimension	