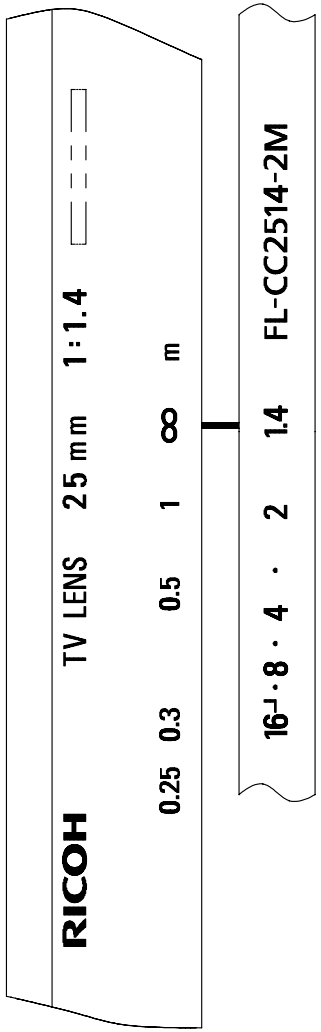

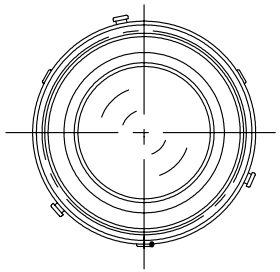

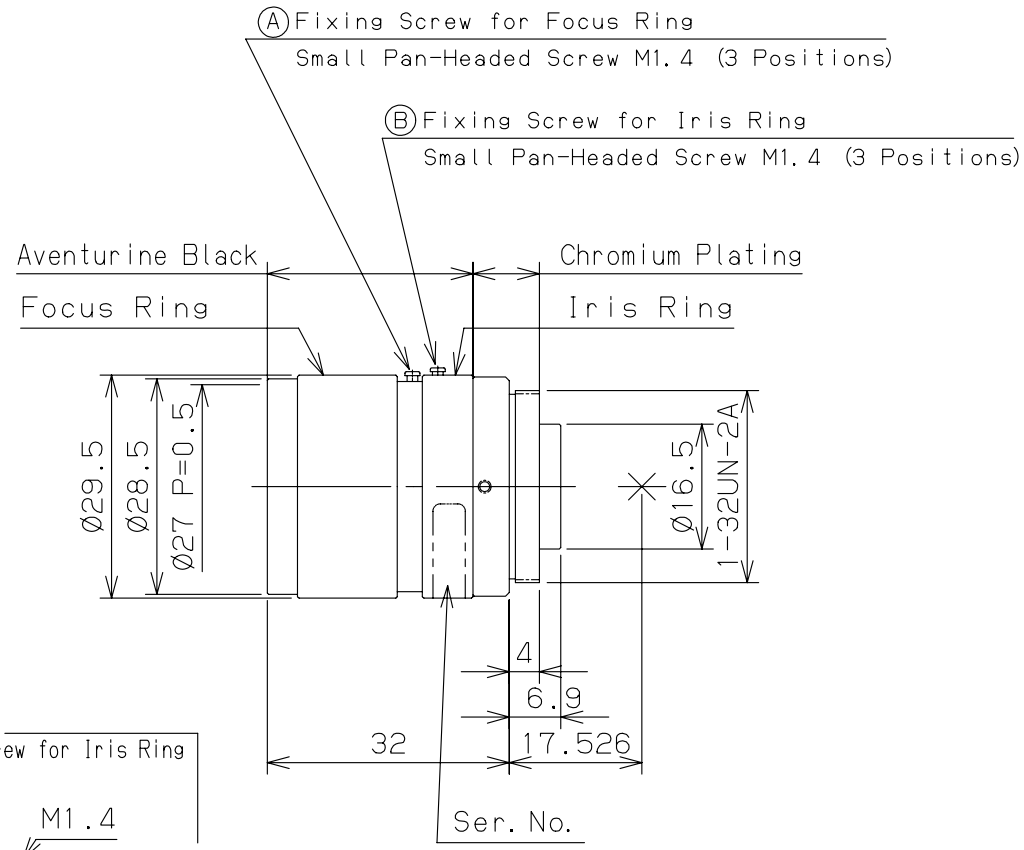

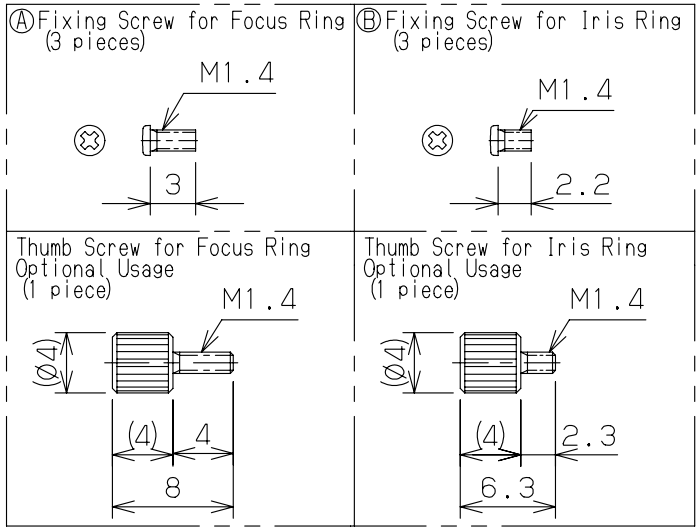

	FL-CC2514-2M
SPEC. INFO	3132500-S001-RC-B33
	Oct.04.2012
RICOH	